

LuOcean Mini 4

LU1064Dyyy Diode Laser with up to 65 W at 1064nm



Description:

The Lumics **LuOcean Mini 4** diode laser series offers OEM integrators an excellent product to manufacture state-of-the-art end-user laser systems.
The easy integration and safe use of these laser components in combination with several accessories and features give the chance to be cost-efficient in development and manufacturing.

Features & Functions:
- Wavelength 1064nm
- (105/200/600)µm NA 0.22 fiber
- Emitter electrically in series
- Temperature sensor

Options:
- Exchangeable window
- Red or green pilot
- Fiber & Power monitor
- OEM LD driver & cooler
- Controllable pilot intensity

Benefits:
- Single emitter long lifetime
- Passive cooling
- Sealed housing
- Small foot print
- SMA connector

Applications:
- Therapeutic
- Dental
- Dermatology
- Veterinary
- Pumping

Module Drawing (Dimensions in mm)

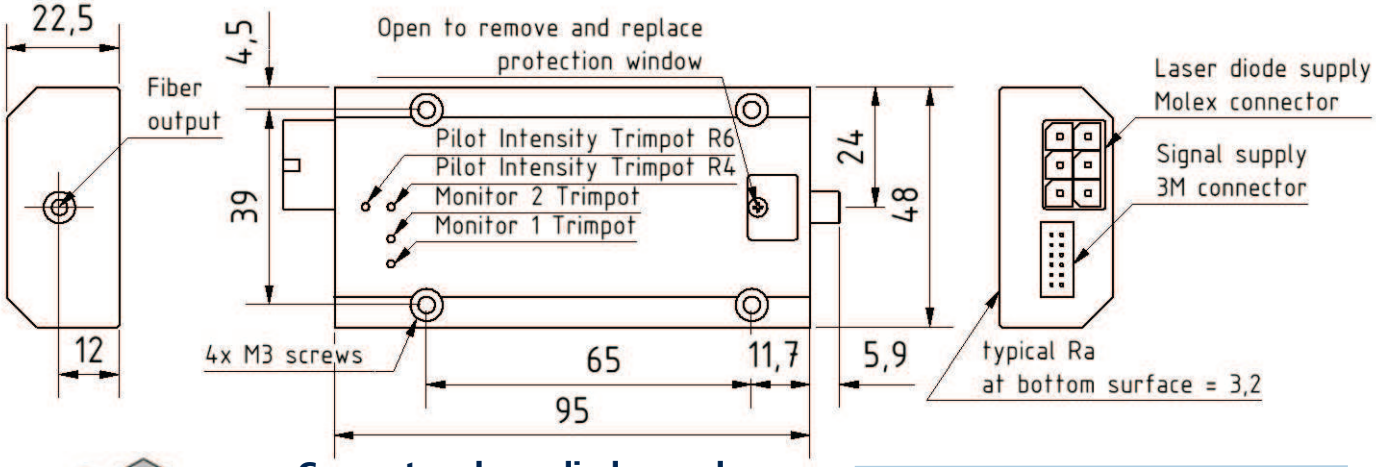

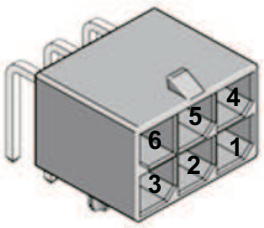

Connector - laser diode supply

Molex™ connector (Part No. 172064-0006).
Pin connection dependant on individual electro-optical configuration. Maximum current per pin is 26 A if total current to cathode exceeds 26 A two pins must be connected to cathode of driver board

Counterparts for external cable
Molex Mega-Fit Receptacle Housing Part No. 171692-0106
Molex Mega-Fit Female Crimp Terminal
Part No. 76823-0322

Pin	Configuration
1	Laser diode cathode (-)
2	no connection
3	no connection
4	no connection
5	no connection
6	Laser diode anode (+)

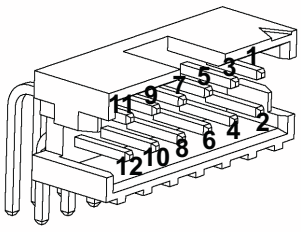

Connector - signals

3M™ connector on laser module
(Part No. 159112-5012)

Counterpart for external cable
Molex Milli Grid Cable to Board Receptacle
Part No. 87568-1273. Flat ribbon cable with pitch of 1mm and AWG28.

Pin	Configuration
1	Supply +12V
2	Fiber Sensor 1 Out (0-12V) (*)
3	GND1
4	Fiber Sensor 2 Out (0-12V) (*)
5	Monitor Photo Diode 1 Out (0-4)V (*)
6	Pilot Supply (5 V red, 8 V green) (*)
7	Monitor Photo Diode 2 Out (0-4)V (*)
8	Pilot GND2
9	NTC / PT100 / LM35 Supply 5V (*)
10	Pilot intensity control In (0-5)V (*)
11	NTC / PT100 / LM35 Signal (*)
12	No connection

* optional

We manufacture diode lasers.

Electrical and Optical Characteristics (Typical laser specifications at 25° C *)

Parameter	Symbol (Conditions)	105µm	200µm	600µm	Unit
Optical Characteristics					
Maximum output power (1)	P_{op} (c.w.)	28	40	65	W
Peak wavelength (at P_{op})	λ_{peak} (c.w.)	1064 ± 10	1064 ± 10	1064 ± 10	nm
Spectral width (FWHM)	λ_{FWHM}	4	4	6	nm
Spectral shift with temp.	$\lambda_{T\ Shift}$	0.3	0.3	0.3	nm/K
Spectral shift with current	$\lambda_{I\ Shift}$	0.6	0.6	0.6	nm/A
Electrical Characteristics					
Forward current at maximum power	I_{op} (c.w. at P_{op})	11	15	26	A
Absolute maximum forward current	I_{op} (c.w. at P_{op})	12	16	27	A
Forward voltage	V_{op} (c.w. at P_{op})	6	6	6.5	V
Threshold current	I_{th}	< 0.5	< 1	< 2	A
Conversion efficiency	(c.w. at P_{op})	40	40	40	%
Fiber					
Fiber core diameter		105	200	600	µm
Fiber centricity		+-10	+-10	+-10	µm
Numerical Aperture	NA	0.22	0.22	0.22	

Options / General Parameter / Accessories

Parameter	Symbol	Min	Typ	Max	Unit
Pilot Beam (Option (5))					
Pilot Beam Output Power	red/green -	adjustable (6)	0	3	mW
Pilot Beam Wavelength	red/green		650/520		nm
Pilot Beam Operating Voltage	red/green		4/7	5/8	V
Pilot Beam Operating Current	red/green			<35/200	mA
Pilot Beam Intensity Control Voltage	red/green (7)	0(max. Intensity)		5(min. Intensity)	V
Sensors (Options)					
Power Monitor Supply Voltage			12		V
Power Monitor Signal Voltage		0		4 (at max. Power)	V
Fiber Detection Sensor Supply Voltage			12		V
Fiber Detection Sensor Signal Voltage		0		12	V
Temperature Sensor		Standard NTC (10k) or optional (PT100 or LM35)			
General Parameters & Specification					
Storage Temperature	T_S	0		55	°C
Operation Temperature *	T_{op}	10		45	°C
Humidity / Non-condensing Atmosphere **				90	%
Weight			160		g
Compliance			CE, ROHS		
Thermal resistance (from bottom to internal temperature sensor)	R_{th}		0.1		K/W
Further Options (Please ask for quotation if needed)					
2nd Monitor Diode / 2nd Fiber Detection Sensor					
Optical Fiber Patchcord with SMA Connectors					
Laser diode driver					
Interface cable					

Notes

* taken at internal temperature sensor - power drop read note (3) ** we recommend to operate the laser above dew point

(1) Power is measured ex fiber according to given fiber specifications including measures and tolerances of fiber and ferrules for uncoated fiber facets.
Given value is the maximum power level. For given max. power level operating current and voltage can deviate by max.10% from typcial values and is lower than maximum values. Please choose your laser driver design accordingly.

(2) Do not exceed maximum forward current for rated power as given above by more than 5% otherwise the laser diode may be damaged.

(3) Rule of thumb: Power ex fiber decreases up to 5% (<1100nm) and up to 7% (>1400nm) every 10 °C temperature increase at internal temperature sensor. Lifetime decreases by about factor of two every 10 °C.

(4) Required flatness of customer heat sink 0.05mm over 100mm.

(5) Red and green minimum pilot power is set at factory by customer request. Standard is 1 mW.

(6) Adjust trimpot R6 when Intensity pin 10 control is left open.

(7) Adjust trimpot R4 to achieve 0%-100% pilot intensity for 5V to 0V at pin 10.

(8) Calculation example of thermal load and necessary thermal resistance of heat sink to maintain internal diode temperature of 25°C :
Thermal load = Output power * (1/conversion efficiency - 1)
Heat sink thermal resistance = (25 °C - ambient temperaure) / thermal load
Example: Output power: 22 W, Conversion efficiency: 0.22, Thermal resistance between bottom of module to internal temperaure sensor: 0.1 K/W, Internal temperature: 25 °C
Thermal load = 22 W * (1/0.22 - 1) ~ 80 W , Heat sink thermal resistance = (25 °C - 20 °C) / 80 W = 0.06 K/W

(9) Read and carefully follow operating manual instructions. Especially, whenever power supply is switched on or off, always disconnect from laser module.
See manual for details. Uncontrolled on / off switching may cause spikes and result in fatal device damage as well as over temperature, hard shocks or dirt on the sealing window behind the fiber flange.

Fiber Connector

(1) Lumics laser diode fiber coupling technology ensures loss into the fiber cladding of <2% of the total power if the fiber centricity is below 10µm and ferrule diameter and distance of the fiber end facet to the reference plane complies with shown technical drawing. Use a fiber microscope to check for dust free fiber end facet and fiber centricity.
(2) Free standing fibers suffer from higher risk of fiber damage to the fiber tip due to mechanical stress by handling and the fiber end facet can not be polished as simple as for not free standing fibers.
(3) For more information see http://www.lumics.de/wp-content/uploads/lu_fiber_patchcords.pdf

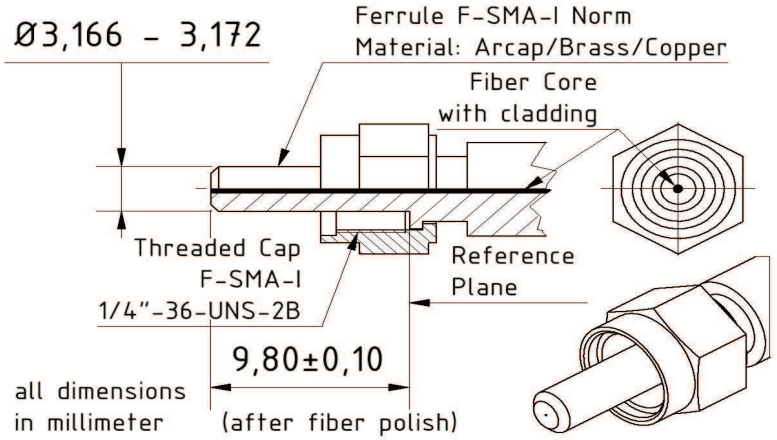

User Safety



We manufacture diode lasers.